HEAVY EQUIPMENT JACKS

OPERATOR'S MANUAL

MLJ100-360

100 TONNE, Single Stage

Heavy Equipment Jack

Serial Number:

Scorpion Jacks International
PO Box 843, Aitkenvale Queensland 4814, Australia
Ph: +61 7 47552114 – Fax: + 61 7 47550794
Email: enquiries@scropionjacks.com.au
Web: www.scorpionjacks.com.au

Table of Contents

DIAGRAM 3

DESCRIPTION 4

ASSEMBLY 4

ADJUSTMENTS 5

SAFE OPERATING PROCEDURES 7

MAINTENANCE 9

ANNUAL / PERIODIC SERVICE SCHEDULE TEMPLATE 10

SERVICE NOTES – HARSH CONDITIONS 12

RECOMMENDED ON SITE SPARES 13

WARRANTY INFORMATION 14

TEST CERTIFICATE 15

MLJ100-360

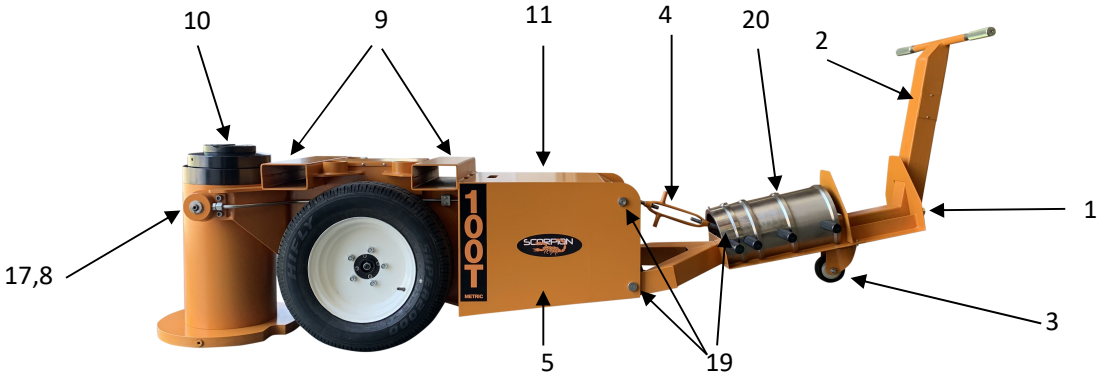

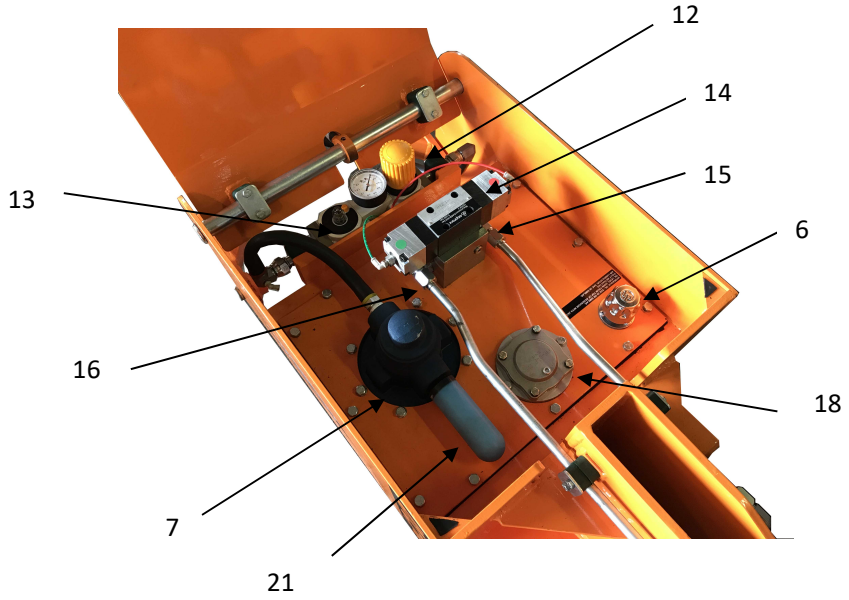

1	Air Connection
2	"UP", "HOLD", "DOWN" Control
3	Castor
4	Handle Adjustment
5	Oil Reservoir
6	Filler/Breather
7	Pump
8	Test Point
9	Fork Pockets
10	Load Cap
11	Hinged Cover
12	Air Filter / Regulator
13	Air Lubricator
14	Directional Control
15	Hydraulic Relief Valve
16	Counterbalance Valve
17	Trunnion
18	Hydraulic Return Filter
19	Pins
20	Load Chock Set
21	Air Silencer

Specifications

Cylinder Max. Lift	100 tonne @ 22,750 kpa (3,3000psi)
Max. Air Pressure	620 kpa (90 psi)
Air Pressure Safety Relief	689 kpa (100 psi)
Hydraulic Pressure Relief	24,000 kpa (3,500 psi)
Counterbalance Valve	25,500 kpa (3,700 psi)
Tyre Pressure	447 kpa (65 psi)
Hydraulic Oil	SAE 20 Hydraulic oil/equivalent
Air Lubrication	SAE 20 Hydraulic oil/equivalent
M12 Capscrew Torque	145Nm (Dry), 110Nm (Lubed)

Description

Reciprocating air operated hydraulic pump **(7)** mounted through lid delivering 22,750 KPA (3,300 PSI) hydraulic pressure at 620 KPA (90 PSI) air pressure (max. recommended pressure).

Oil from the pump **(7)** is delivered to a subplate containing a pressure relief **(16)** set to 24,000 KPA (3,500 PSI). The directional control **(14)** is mounted to this subplate; it is a double air pilot operated with a closed centre. The valve is activated with a toggle type air valve **(2)** located in the handle. A counterbalance valve **(16)** set at 25,500 KPA (3,700 PSI) is positioned in the "up" line between the directional control and cylinder.

Oil reservoir **(5)** is located behind the wheels, under the hinged lid **(11).**

The filler breather **(6)** is located in one corner of the Reservoir lid. The oil level when the unit is fully retracted should be about 50 mm (2") from the lid.

Air is supplied via the air connection **(1)** at the rear base of the handle, down the inside of the handle to the Air Filter Regulator **(12),** and Lubricator **(13).** Air pressure can be adjusted, **but should not exceed 620 KPA (90 PSI).** Should this pressure be exceeded the safety valve between the regulator and lubricator will crack and will release air at 689 KPA (100PSI).

DO NOT TAMPER WITH THIS RELIEF.

Assembly

Your Scorpion Jack has been freighted with its handle removed.

Once unpacked, firstly re-fit the load chock rack to handle by removing the phillips head screws from handle. Position the chock rack mounting lugs over the holes (image 1) and re-fit the screws (image 2).

Next, remove the pins **(19)**, from the handle. Refit the lower handle pivot pins first (red arrow) and then the turnbuckle mount pin on the handle (blue arrow).

The Air hose protruding from the inside of the handle attaches to the inlet of the air filter/regulator **(12)**. (red arrow)

The small white nylon tube "plugs into" the fitting on the outlet of the lubricator **(13)** which is marked with a white paint dot. (blue arrow). The coloured nylon tubes "plug into" the end of the Cetop 3 directional control valve. A coloured dot on each fitting will again match the colour of the tubes.

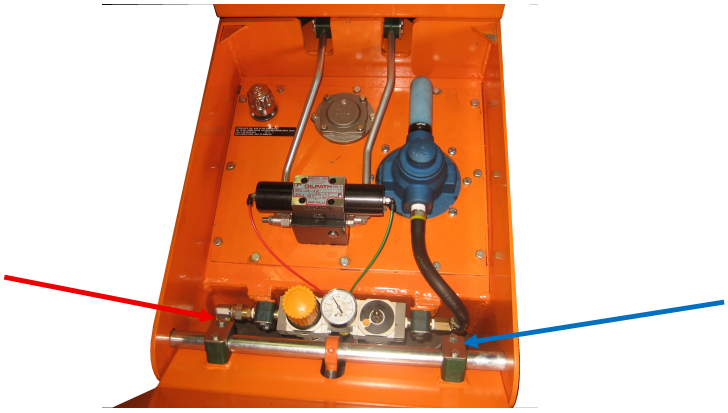

Operate the unit and check for air leaks.

Adjustments

New jacks should need no adjustments as all devices are factory set. Should any devices be damaged or require change or checking during a maintenance cycle please see below:

Lubrication

- With full airflow adjust the airline lubricator **(13)** by rotating the small yellow screw on the top of the sight bowl.
- Observe the oil drops forming in the sight dome (also on top of the lubricator).
- Rotate the adjustment clockwise for less, anti-clockwise for more, until you have approximately one drop every 30-60 seconds.

Air Pressure

- The air filter/regulator **(12)** should be set to 620 KPA (90 PSI) air pressure.
- Firstly check the shop air system will exceed 620 KPA (90 PSI) during this operation.
- If the regulator is not set to its maximum 620 KPA (90 PSI), pull up yellow adjustment knob on top of air filter/regulator.
- Turn clockwise for increased pressure, and anticlockwise for reduced air pressure.
- Once adjustment is complete, push yellow adjustment knob down again.
- Check pressure gauge after completing adjustment to confirm pressure setting is at 90PSI.

Air filter-regulator can be factory set and locked to ensure tampering does not occur. Contact Scorpion Jacks for further details.

DO NOT EXCEED 620 KPA (90 PSI) PRESSURE.

Attempting to exceed recommended input air pressure will cause pneumatic relief valve to activate.

Hydraulic Pressure Relief Valve

This valve **(15)** has been factory set and should not be tampered with. If you suspect this valve is not operating correctly, or is not set to the correct pressure, remove valve and replace with new or service exchange valve.

Contact Scorpion Jacks International to arrange this.

Counterbalance Valve

This valve **(16)** has been factory set and should not be tampered with. If you suspect this valve is not operating correctly, or is not set to the correct pressure, remove valve and replace with new or service exchange valve.

Contact Scorpion Jacks International to arrange this.

Safe Operating Procedures

- Every site and or company will have its own specific set of SOPs for jacking heavy machinery. The below procedure is not intended to supplant those SOPs and is exclusively intended to outline how to operate the jack correctly. All other safety considerations concerning the physical environment in which the jack is being used will be determined by the operator's company or the work site's SOPs.

- To move this jack, first adjust the handle, using the Turnbuckle **(4)** to a convenient height for the operator. By pushing on the handle the self-levelling cylinder will be lifted clear of the floor for easy moving of the unit.

- For forklift lifting of the unit, box sections **(9)** are provided between the chassis just forward of the wheel axles.

- Select a solid level area on which to jack. Position the jack under the identified lift point, using the correct load cap, **(10)** or extension dolly.

DO NOT JACK DIRECTLY ON THE END OF THE ROD, as this could cause damage to the rod

Before engaging the load:

- Ensure the dolly or load cap cannot slip on the surface to be jacked

- Attach the airline to the jack

To Raise:

- Switch the toggle control to "up."

- When the desired height is reached, switch to "hold."

- Insert steel load chocks, ensuring the female surface is facing down and fitted against the corresponding male spigot on the gland of the jack. **

- **Once the desired number of chocks have been placed around the rod, Retract the jack until the rod flange contacts the chock stack and the jack stalls out.** **

- Switch the toggle switch to "hold"**

To Lower:

- Switch the toggle control to "up" to unclamp the load chocks. **
- Remove the load chocks and replace them onto the handle chock rack.**
- Switch the toggle control to "down". The unit must be powered down and will lower at a fixed rate regardless of the load.

****CAUTION:**

DO NOT WORK UNDER EQUIPMENT SUPPORTED ONLY BY A JACK.

- Either place the steel load chocks provided around the rod, using the procedure noted or,
- Place vehicle support stands under the equipment and lower onto the stands before working under machine.

EXTENSION DOLLIES ARE DESIGNED FOR USE WITH A LOAD CAP. Do not jack directly onto the dollies without having the correct load cap in place.

DO NOT STACK DOLLIES. Scorpion Jacks International has designed their range so that only one dolly can be used safely at a time with a jack. SJI believes this represents the highest level of safety achievable whilst jacking under load.

Maintenance – Routine

- Check oil in air lubricator. **(13)** Release pressure on bowl by turning yellow bleed screw on top of cap. Remove threaded bowl from the bottom of lubricator, and add oil until 2/3 full, in lubricator bowl.
- Ensure SAE15 or 20 oil is used only.
- Failure to use correct oil can impact seal life in the hydraulic pump.

This is vital for prolonged service life of all air system components.

- Check the reservoir **(5)** oil level. Fill to approx 50 mm (2") from the top of the reservoir.
- Check air filter/regulator **(12)** bowl. Ensure bowl is empty and that auto-drain assembly is working.
- Check tyre pressure. Low tyre pressure will make the unit difficult to move. SJI recommend maintaining tyre pressure at 65psi.
- Change return line filter element **(18)** every 6 months, or more regularly in harsh service environments. (See attached schedule)
- Change the Pneumatic filter element every 6 months.
- Change Hydraulic suction strainer every 12 months.*****
- Replace hydraulic oil every 12 months.*****
- *****Annual off-site service is recommended for jacks in high use. This decision is solely at the discretion of the operator. Contact Scorpion Jacks for a scope of work for these services.

NOTES: _____

_____

_____

_____

_____

_____

Periodic Service Checklist Template

SCORPION JACKS – SCOPE OF ANNUAL (OR PERIODIC)

ROUTINE OFF-SITE SERVICE WORKS

1. Schedule of Jack Tooling requiring annual service

- (Insert Jack Model and S/N here)

2. Scope of Works

- Jacks are sent one at a time on a custom steel skid to Scorpion Authorised repair and service workshop. The scope of this regular service is as per the below:

3. List of items to be Inspected / Serviced or Replaced

3.1 Items to Inspect:

- Input air pressure (via pressure gauge on FRL assembly) & FRL assembly
- Lubricator Oil
- ID Stickers /Decals
- Tyre Pressure
- Check cylinder rod for damage
- Check Load chocks (when supplied) for damage
- General whole of jack visual assessment for damage including steel tubes, handle, Load Cap etc.
- Cylinder internal surfaces – Bore, Piston, gland.
- Pneumatic Relief and Counterbalance Valves.

3.2 Items to Service:

- Wheel Bearings
- Jack cylinder
- Jack reservoir. – Clean out.

3.3 Items to Replace:

- Hydraulic Filter Element
- Hydraulic Suction Strainer
- Hydraulic Oil
- Pneumatic Filter Element
- Jack cylinder seal kit.
- Hydraulic valve safety caps (if reset required)
- Cap screws - Base Plate (optional)
- Cap screws – Gland (optional)
- Cap screws – Piston (optional)

3.4 Items to test:

- SC Pump. – Ensure pump is generating full hydraulic system pressure at the nominated air input pressure.
- FRL assembly. Ensure the air regulator is generating system pressure, the filter auto-drain is working, and the lubricator is functioning.
- Hydraulic Relief Valve. Relieving at nominated pressure
- Hydraulic Counterbalance Valve. Opening at nominated pressure
- Jacking cylinder separately after re-seal, and prior to re-assembly to jack chassis.
- **Whole jack after completion. – Tonnage Load Test.**

NOTES:

Service Notes – Harsh Environments

Daily/Weekly:

- Ensure there is oil in the pneumatic lubricator… This is vital to prolonging the life of the air equipment, and reducing the possibility of premature failure. Oil should be filled to 2/3 full in the bowl.
- Ensure turnbuckle is greased and operating freely.
- Ensure folding hinge mechanism (ELP Series) is greased and hinge pin can be removed and replaced easily.

Every 3-6 months:

- Change the pneumatic filter element
- Change the hydraulic filter element
- Change the hydraulic suction strainer

Every 6 months:

- Ensure wheel bearings are greased

Generally:

- Check the hydraulic oil level in the reservoir periodically. Oil level should be approx. 50mm below the level of the filler cap.
- Ensure tyres are inflated to 65psi.
- Ensure no dirt/dust buildup occurs in the rod spigot
- Ensure all I.D. Stickers are visible and undamaged.

Recommended on-site spare parts

Remote mine sites

- Cylinder Seal Kit
- Hydraulic Relief Valve – Preset
- Hydraulic Counterbalance Valve – Preset
- Hydraulic Filter Element
- Hydraulic Suction Strainer
- Double air pilot control valve
- Pneumatic filter element
- Filter/Regulator/Lubricator Assembly
- Pneumatic Relief Valve
- Air/Hyd Pump Service kit
- Air/Hyd Pump Air seal kit
- Air/Hyd Pump Hyd seal kit
- Air/Hyd Pump APA valve
- Air/Hyd Pump O-Rings suit APA Valve (not part of soft seal kit)
- Air/Hyd Pump Bumper seal (not part of soft seal kit or repair kit)
- Air/Hyd Pump (Optional)
- Sticker/I.D. Kit
- Wheel Bearing Kits
- Thread Sealing Washers

NOTE:

For specific part numbers see the spare parts manual or contact Scorpion Jacks for a quote.
Some items may have recommended replacement timelines – see service notes in operators manuals.

SCORPION JACKS INTERNATIONAL WARRANTY

Scorpion Jacks International guarantees for 12 months from the date of purchase, to correct by repair or parts replacement, without charge, any defects arising from faulty workmanship or material. A Scorpion Jack subject to claim under this guarantee should be returned as a complete unit to Scorpion Jacks International, 7/66 Pilkington Street, Garbutt Qld 4814, Australia.

The Scorpion Jacks International Warranty outlined in the previous paragraph above does not apply…

- To any defect or failure attributable to accident, misuse, abuse, negligence, or non-observance of site regulations on the part of the user
- If the Jack has been serviced by a person not authorised by Scorpion Jacks International to do so, or with non-approved parts
- To freight costs to and from Scorpion Jacks International
- SC Pumps. Please refer to the SC Hydraulic Corporation warranty document attached. Pumps must be sent whole, to SC Hydraulic Corporation in the USA. This is impractical in almost all circumstances. Scorpion Jacks offer in lieu, a limited liability warranty on SC pumps, based on their world leading quality and reliability. Please note soft seals are not covered under SC or Scorpion warranty.

NOTE: While Scorpion Jacks International believes our Scorpion Jacks are amongst the safest built worldwide, *all normally accepted work and safety practices must be followed.*

SCORPION™
HEAVY EQUIPMENT JACKS